Wall mounted handrail bracket

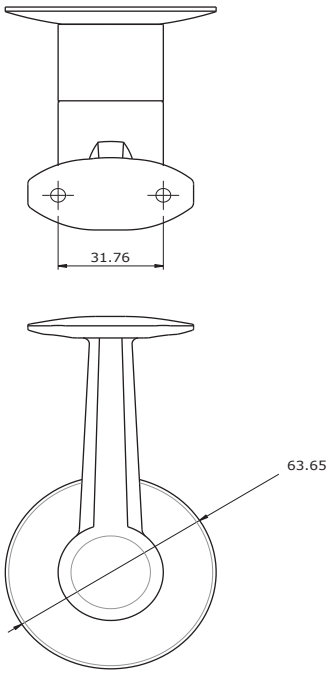

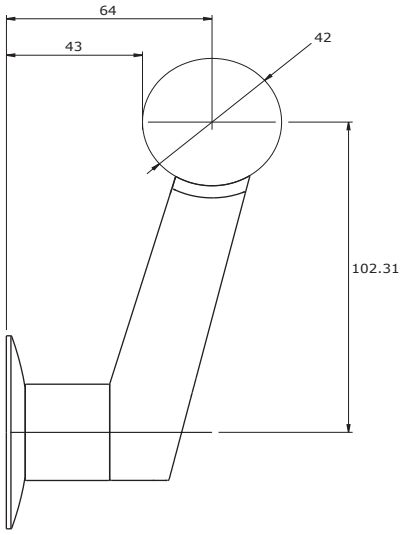

DS-02S

Wall mounted handrail bracket

Assembly Components:

The DS-02 wall mounted bracket comes complete with mounting plate, extension and handrail bracket.

Material:

Stainless Steel

Finish: Brushed; Optional custom powder coating extra.

Recycled content: 80 - 100%

Installation:

Secure bracket using three flathead screws. For concrete use drop-in anchors. For drywayll installations 2" of solid backing behind each bracket is recommended. Please consult local building codes.

For more detailed instructions contact componance.

Warranty: We extend a complete replacement warranty on our products when used for the intended purpose in the proper application. We will replace any componance supplied part found to be defective. Engineering of the supplied component in assembly with any other part is the sole responsibility of the purchaser, the specifier or any agent acting on behalf of the purchaser or specifier. Any liability of componance is limited to the value of the supplied part(s).

Vancouver British Columbia Canada
p: 604.771.5128 e: info@componance.com www.componance.com

componance

Wall mounted handrail bracket

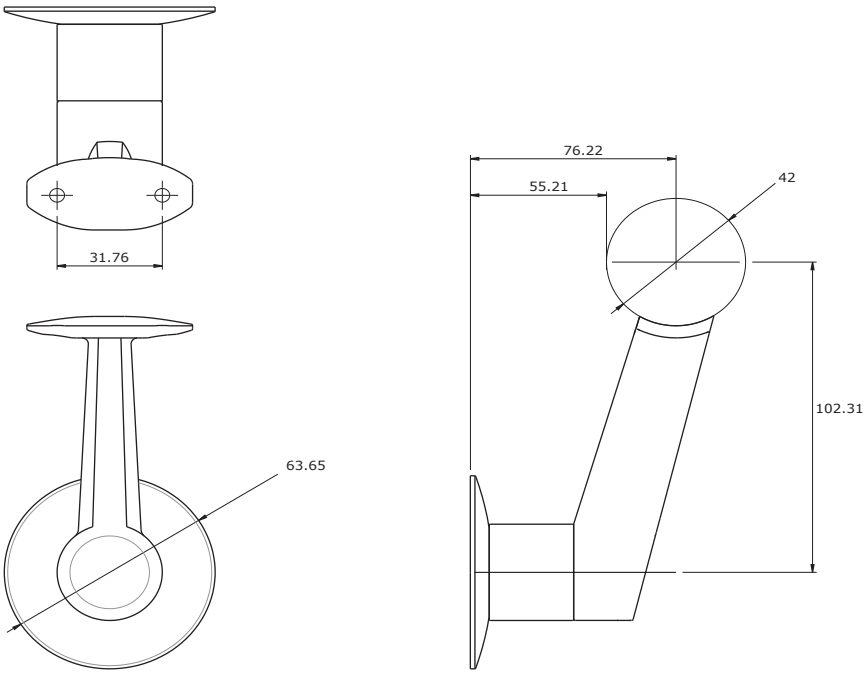

DS-02L

Wall mounted handrail bracket

Assembly Components:

The DS-02 wall mounted bracket comes complete with mounting plate, extension and handrail bracket.

For glazing applications specify the DS-01 version.

Material:

Stainless Steel

Finish: Brushed; Optional custom powder coating extra.

Recycled content: 80 - 100%

Installation:

Secure bracket using three flathead screws. For concrete use drop-in anchors. For drywayll installations 2" of solid backing behind each bracket is recommended. Please consult local building codes.

For more detailed instructions contact componance.

Warranty: We extend a complete replacement warranty on our products when used for the intended purpose in the proper application. We will replace any componance supplied part found to be defective. Engineering of the supplied component in assembly with any other part is the sole responsibility of the purchaser, the specifier or any agent acting on behalf of the purchaser or specifier. Any liability of componance is limited to the value of the supplied part(s).

Vancouver British Columbia Canada
p: 604.771.5128 e: info@componance.com www.componance.com

componance