Glass mounted handrail

FF-01S

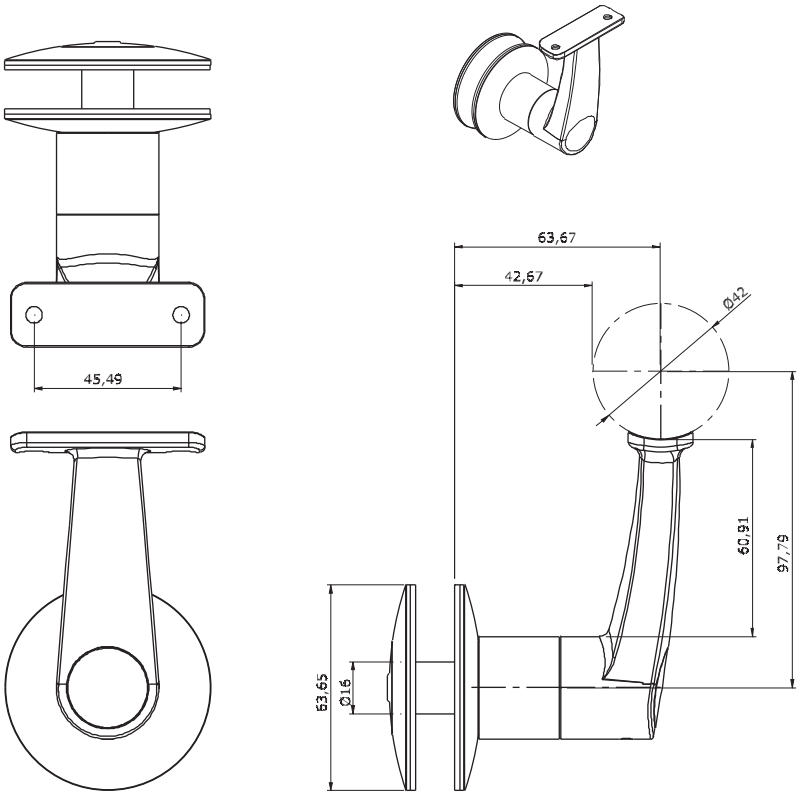

Glass mounted handrail

Assembly Components: N/A

Material: Stainless Steel, machined and cast

Finish: Satin

Installation: Mount to glazing using hardware and fasteners provided. Bracket may be mounted through or between glazing panels. Please specify glass thickness when ordering.

Notes: the flowform system is ADA compliant. Follow ADA guidelines and local codes when installing the system

Warranty: We extend a complete replacement warranty on our products when used for the intended purpose in the proper application. We will replace any componance supplied part found to be defective within 1 year. Engineering of the supplied component in assembly with any other part is the sole responsibility of the purchaser, the specifier or any agent acting on behalf of the purchaser or specifier. Any liability of componance inc. is limited to the value of the supplied part(s).

Vancouver British Columbia Canada
p: 604.771.5128 e: info@componance.com www.componance.com

componance

Glass mounted handrail

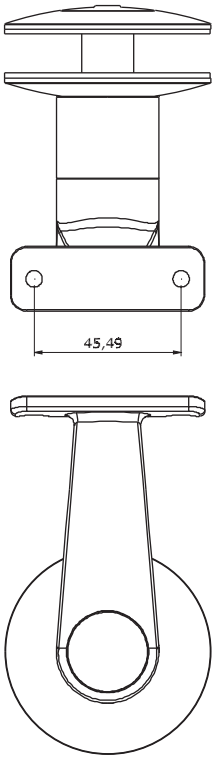

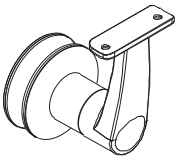

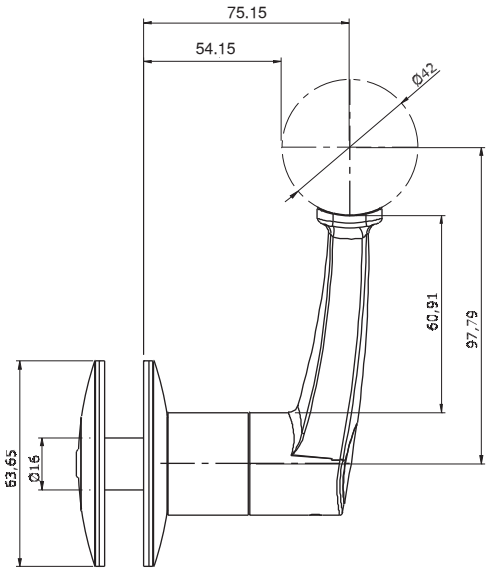

FF-01L

Glass mounted handrail

Assembly Components: N/A

Material: Stainless Steel, machined and cast

Finish: Satin

Installation: Mount to glazing using hardware and fasteners provided. Bracket may be mounted through or between glazing panels. Please specify glass thickness when ordering.

Notes: the flowform system is ADA compliant. Follow ADA guidelines and local codes when installing the system

Warranty: We extend a complete replacement warranty on our products when used for the intended purpose in the proper application. We will replace any componance supplied part found to be defective within 1 year. Engineering of the supplied component in assembly with any other part is the sole responsibility of the purchaser, the specifier or any agent acting on behalf of the purchaser or specifier. Any liability of componance inc. is limited to the value of the supplied part(s).

Vancouver British Columbia Canada
p: 604.771.5128 e: info@componance.com www.componance.com

componance