Architectural Building Components

C-13

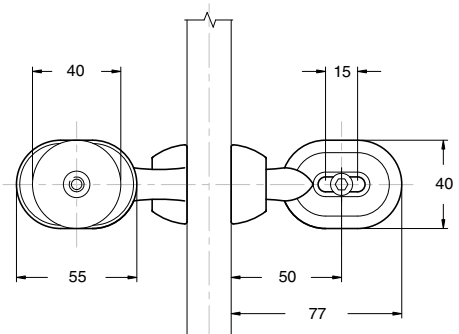

FRONT ELEVATION

BACK ELEVATION

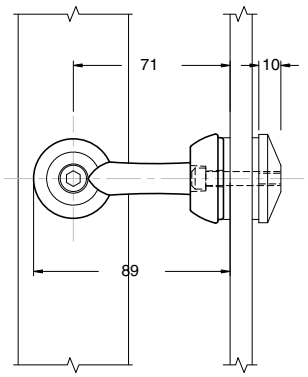

SIDE ELEVATION

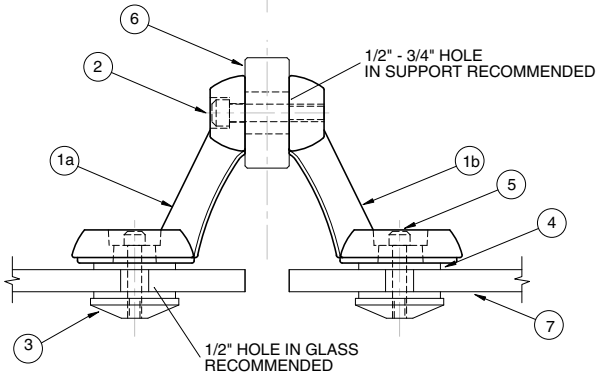

PLAN VIEW

PLEASE NOTE:

Posts for half assemblies should be prepared with 5/16" TAPPED (threaded) UNC holes for bracket mounting. Full assemblies require a 1/2" drilled hole. C-13 full assemblies "self-fasten" whereas the half assembly fastens directly into the post.

When ordering please specify both post thickness and glass thickness.

Handrail Glass Support

Assembly Components: Full Assembly: 1A) C-13-C: Aluminum Casting, Counterbored; 1B) C-13-T: Aluminum Casting, Tapped; 2) 5/16" Bolt; 3) C-13-B: Machined Aluminum Button (2); 4) C-13-G: 1/8" Neoprene Gasket (4); 5) 1/4" Bolt (2).

Half Assembly: 1A) C-13-C: Aluminum Casting, Counterbored; 2) 5/16" Bolt; 3) C-13-B: Machined Aluminum Button (1); 4) C-13-G: 1/8" Neoprene Gasket (2); 5) 1/4" Bolt.

Material: Aluminum Alloy 710; Sandcast.

Finish: Shotblasted; Clear Anodized; Optional custom powder coating extra.

Installation: Mount C-13-C and C-13-T to structural support using 5/16" bolt. Insert 1/4" bolts through slotted holes, and hold with Neoprene Gaskets C-13-G. Mount glass/panel, and attach with Neoprene Gaskets C-13-G and C-13-B Machined Aluminum Buttons.
A minimum of four holding points per panel is required to avoid downwards turning of C-13 Assembly.

Warranty: We extend a complete replacement warranty on our products when used for the intended purpose in the proper application. We will replace any componance supplied part found to be defective. Engineering of the supplied component in assembly with any other part is the sole responsibility of the purchaser, the specifier or any agent acting on behalf of the purchaser or specifier. Any liability of componance inc. is limited to the value of the supplied part(s).

Vancouver British Columbia Canada
p: 604.771.5128 e: info@componance.com www.componance.com

componance